REFERENCE : KI0110

SIZES : U

COMPOSITION :

Main fabric : Polyester ripstop 190T Acrilic backing 100% polyester
Fabric : Honeycomb Polyester PU backing As contrast fabric. 100%polyester
Lining : Polyester 210D PU backing - 75 As internal lining. 100%polyester
Mesh : Polyester mesh 150 As contrast fabric on lateral pockets. 100% polyester
Mesh 1 : Polyester puffy mesh As contrast fabric, on back panel + back side of shoulder straps + back side of waist band. 100% Polyester

TECHNICAL DETAIL :

Acrilic backing

ARTICLE WEIGHT :

410 gr/pc

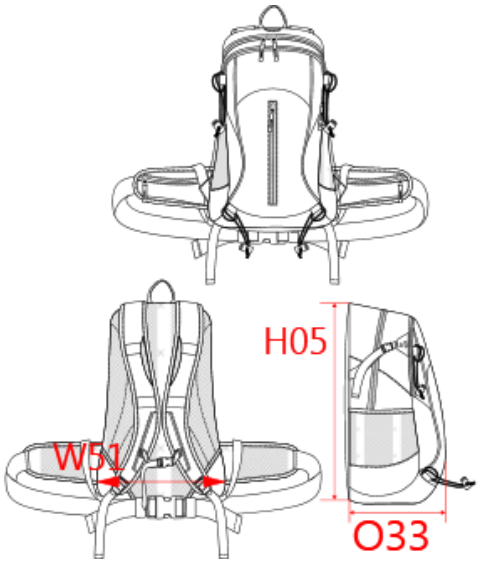

DESCRIPTION
Français : Sac à dos multisports
English : Multi use backpack
Nederlands : Multi use backpack
Deutsch : Allround-Rucksack
Español : Mochila tiempo libre
Italiano : Zaino multiuso
Português : Mochila

COLORS	PANTONE SERIGRAPHIE
Black / Slate grey	Black / 424C
Black / Royal blue	Black / 287C

MEASUREMENT							
Description	**U**						
H05 Hauteur totale / Total height	**45**						
W51 Total width	**29**						
O33 Deep of bottom part	**25**						

PACKING	
Box	20 pcs / box U => L:50cm W:38cm H:52cm GW:9,25Kg NW:8,25Kg